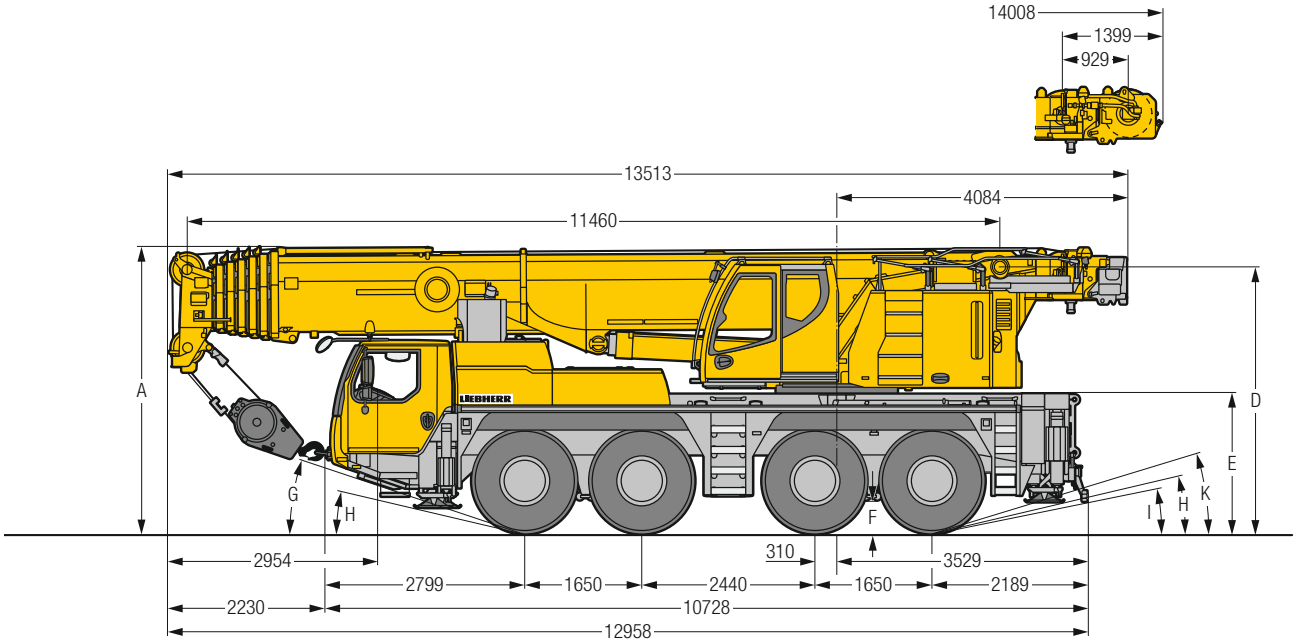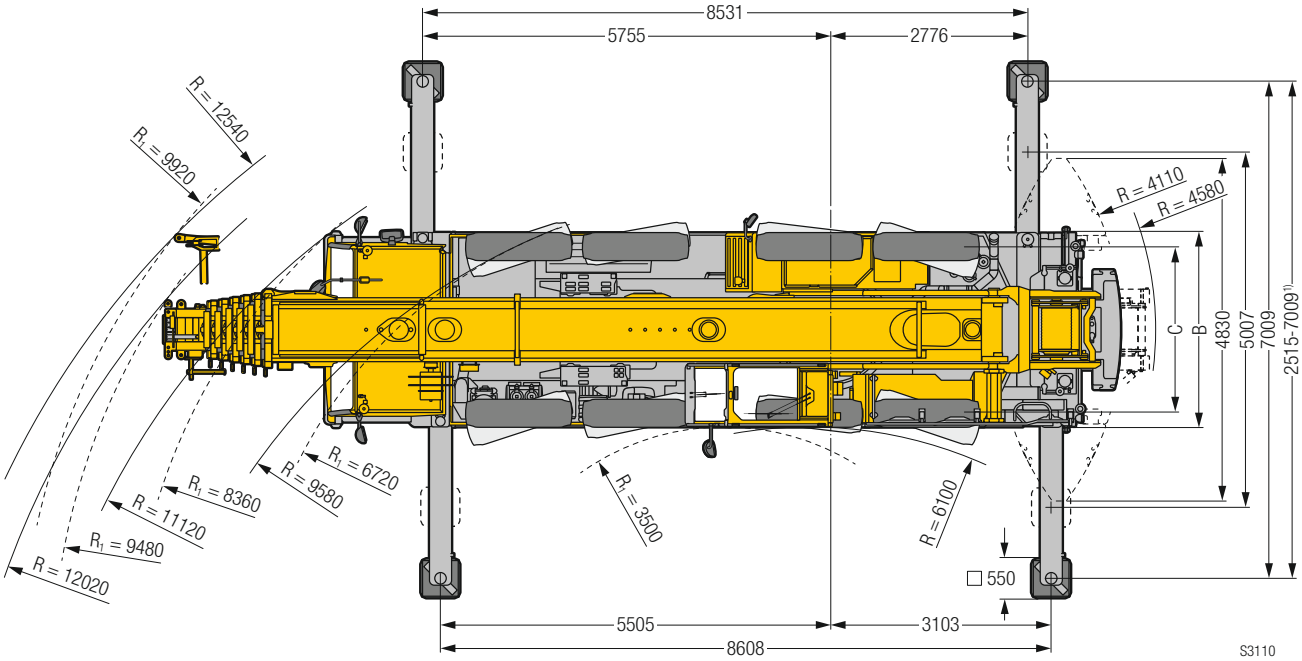100 tons mobilkran